THIS DRAWING IS UNPUBLISHED. RELEASED FOR PUBLICATION 20
© COPYRIGHT 20 BY TYCO ELECTRONICS CORPORATION. ALL RIGHTS RESERVED.

PART NUMBER	REV	TERMINATOR	FEED TYPE	DESCRIPTION
1528700-1	A	LEADMAKER	MECH POST FEED	CUTS CARRIER
1528700-2	A	BENCH	MECH PRE FEED	CUTS CARRIER
1528700-6	A	LEADMAKER	MECH POST FEED	CONTINUOUS CARRIER
7-1528700-1	A	LEADMAKER	MECH POST FEED	-1 AND SPARE PARTS
7-1528700-2	A	BENCH	MECH PRE FEED	-2 AND SPARE PARTS
7-1528700-6	A	LEADMAKER	MECH POST FEED	-6 AND SPARE PARTS
7-1528700-7	A	-	-	SPARE PARTS KIT

SET UP GAGE 458637-3

LOC	DIST
A	66

REVISIONS

P	LTR	DESCRIPTION	DATE	DWN	APVD
	A	SEE ECO-06-024469	18OCT2006	LJL	MC

CRIMP DATA TYCO TERMINAL TYCO CRIMP SPECS

TERMINAL NAME: PIN / SOCKET SIZE 20 DF

CRIMP	SIZE	TYPE	RANGE
WIRE	1.07 [.042 IN]	F	28-24 AWG
INSUL	1.57 [.062 IN]	O	1.27-1.52 [.050-.060 IN]

WIRE STRIP LENGTH 2.13-2.64 [.084-.104 IN]

APPL INSTRUCTIONS 408-8322 & 408-8490

TERMINAL APPL SPEC 114-10000 - - - FEED 7.62 [.300 IN]

TERMINALS APPLIED

PIN	SOCKET	-	-
66682	66683	-	-
5066682	5066683	-	-
-	-	-	-
-	-	-	-

WIRE SIZE	CRIMP HEIGHT *	REF SETTING *
24 AWG	0.81 ±0.03 [.032 ±.001 IN]	C 2
26 AWG	0.74 ±0.03 [.029 ±.001 IN]	C 8
28 AWG	0.66 ±0.03 [.026 ±.001 IN]	D 3
-	-	-
-	-	-
-	-	-
-	-	-
-	-	-
-	-	-
-	-	-
-	-	-
-	-	-

1. RECOMMENDED SPARE PARTS.
2. GREASE RAM, CAM, CAM FOLLOWER AND FEED ROD LIGHTLY.
3. CERTAIN TERMINALS REQUIRE LUBRICATION. REFER TO THE APPLICATOR INSTRUCTION SHEET FOR MORE INFORMATION.
4. LUBRICATE DAILY PER THE APPLICATOR INSTRUCTION SHEET SUPPLIED WITH THE APPLICATOR.

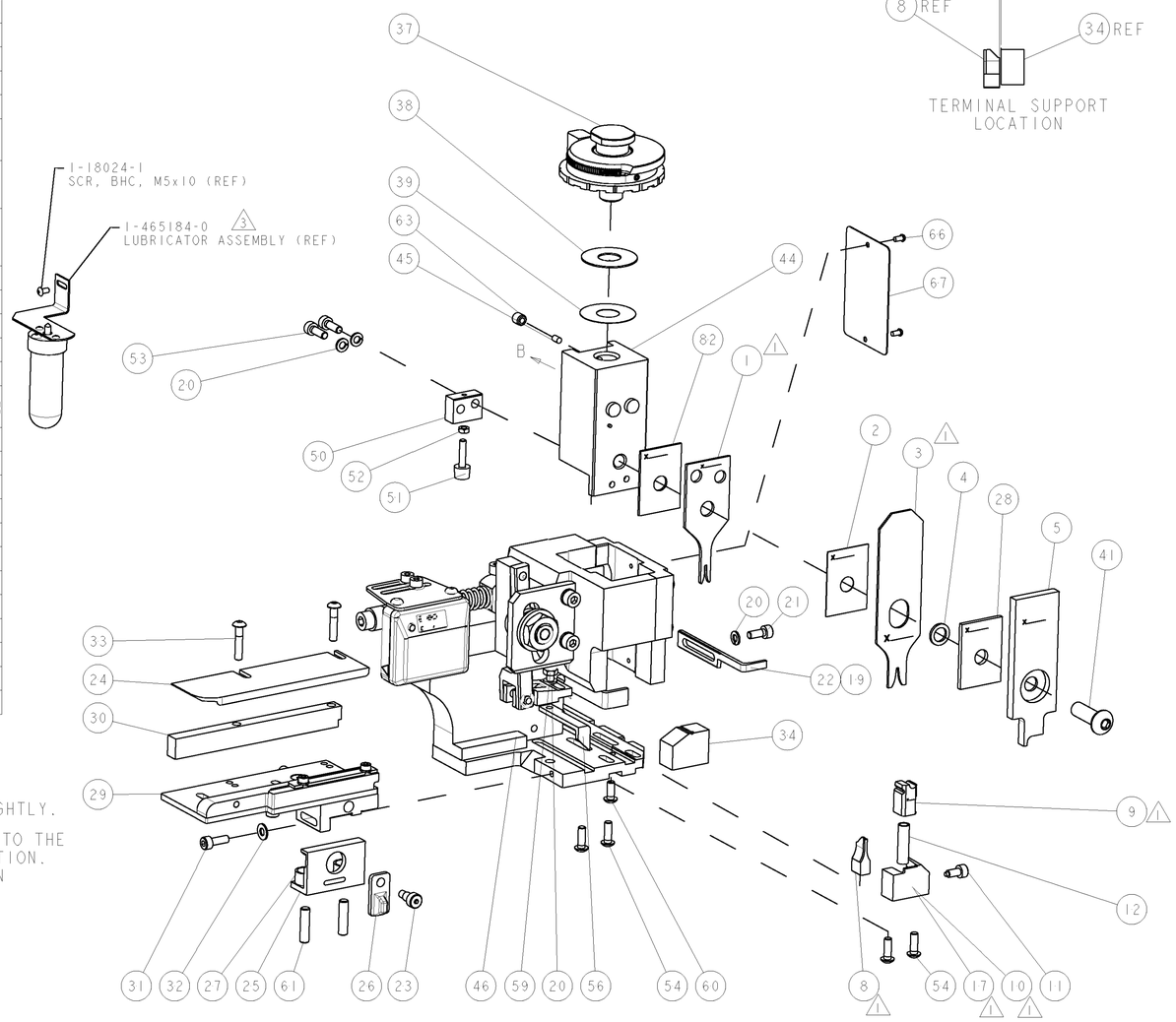

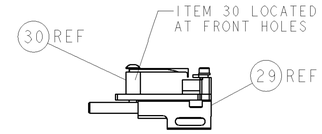

FEED TRACK POSITION GUIDE BY WIRE BARREL

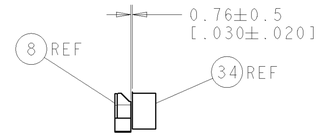

TERMINAL SUPPORT LOCATION

	-	-	-	-	-	-	-	-	73
	-	-	-	-	-	-	-	-	72
	-	1	1	1	1	1	1	1338705-3	DOCUMENTATION PACKAGE	71
	-	-	-	-	-	-	-	-	-	70
	-	-	-	-	-	-	-	-	-	69
	-	-	-	-	-	-	-	-	-	68
	-	1	1	1	1	1	1	461264-5	PLATE, IDENTIFICATION	67
	-	2	2	2	2	2	2	21017-2	SCREW, DRIVE	66
	-	-	-	-	-	-	-	-	-	65
	-	-	-	-	-	-	-	-	-	64
	-	1	1	1	1	1	1	3-18031-0	SCR, SET, CUP POINT M6 X 6.0	63
	-	-	-	-	-	-	-	-	-	62
	-	2	2	2	2	2	2	2-18032-5	SCR, SET, FLT POINT M5 X 20.0	61
	-	1	1	1	1	1	1	18024-7	SCR, BTN SKT HD CAP (M4 X 10.0)	60
	-	1	1	1	1	1	1	5-18022-2	SCR, HEX HD CAP M4 X 8.0	59
	-	-	-	-	-	-	-	-	-	58
	-	-	-	-	-	-	-	-	-	57
	-	1	1	1	1	1	1	1338685-1	PAWL, FEED	56
	-	-	-	-	-	-	-	-	-	55
	-	4	4	4	4	4	4	18024-8	SCR, BTN SKT HD CAP (M4 X 12.0)	54
	-	2	2	2	2	2	2	1-18023-2	SCR, SKT HD CAP M4 X 12.0	53
	-	1	1	1	1	1	1	18030-1	NUT, HEX, REG M3	52
	-	1	1	1	1	1	1	811242-5	BUMPER, HOLD DOWN	51
	-	1	1	1	1	1	1	690753-2	SPACER, TONKER	50
	-	1	1	1	1	1	1	18024-3	SCR, BTN SKT HD CAP (M3 X 10.0)	49
	-	-	1	-	-	1	-	1338675-1	CAM, UNIVERSAL PRE FEED	48
	-	1	-	1	1	-	1	1338676-1	CAM, UNIVERSAL POST-FEED	47
	-	1	1	1	1	1	1	1320999-3	APPLICATOR SUBASSEMBLY, HDI	46
	-	1	1	1	1	1	1	690191-1	PLUG,NYLON	45
	-	1	1	1	1	1	1	1338660-1	RAM	44
	-	-	-	-	-	-	-	-	-	43
	-	-	-	-	-	-	-	-	-	42
	-	1	1	1	1	1	1	2-18024-6	SCR, BTN SKT HD CAP (M8 X 25.0)	41
	-	-	-	-	-	-	-	-	-	40
	-	1	1	1	1	1	1	690125-1	SHIM SUB-ASSY	39
	-	1	1	1	1	1	1	469367-8	SHIM	38
	-	1	1	1	1	1	1	879103-3	FINE ADJUST HEAD ASSEMBLY	37
	-	-	-	-	-	-	-	-	-	36
	-	-	-	-	-	-	-	-	-	35
	-	1	1	1	1	1	1	1424186-2	SUPPORT, TERMINAL	34
	-	2	2	2	2	2	2	1-18024-0	SCR, BTN SKT HD CAP (M4 X 20.0)	33
	-	1	1	1	1	1	1	18027-2	WASHER, FLAT, REG M4	32
	-	1	1	1	1	1	1	1-18023-2	SCR, SKT HD CAP M4 X 12.0	31
	-	1	1	1	1	1	1	1320908-4	SPACER, STRIP GUIDE	30
	-	1	1	1	1	1	1	1633073-1	STRIP GUIDE ASSEMBLY	29
	-	1	1	1	1	1	1	2-455888-2	SPACER, CRIMPER	28
	-	2	2	2	2	2	2	1-22284-0	SPRING, COMPRESSION	27
	-	1	1	1	1	1	1	356835-1	LEVER, DRAG RELEASE	26
	-	1	1	1	1	1	1	240792-1	DRAG, TERMINAL	25
	-	1	1	1	1	1	1	1320928-1	PLATE, STRIP GUIDE	24
	-	1	1	1	1	1	1	980371-4	SCR, SKT HD SHLDR 5.0 DIA X 6.0	23
	-	1	-	1	1	-	1	690472-2	STRIPPER	22
	-	1	1	1	1	1	1	1-18023-1	SCR, SKT HD CAP M4 X 10.0	21
	-	4	4	4	4	4	4	18025-2	WASHER, SPRG LOCK, REG M4	20
	-	-	1	-	-	1	-	690472-7	STRIPPER	19
	-	-	-	-	-	-	-	-	-	18
1	-	1	-	-	1	-	-	1338684-1	SHEAR HOLDER, FRONT	17
	-	-	-	-	-	-	-	-	-	16
	-	-	-	-	-	-	-	-	-	15
	-	-	-	-	-	-	-	-	-	14
	-	-	-	-	-	-	-	-	-	13
	-	1	1	1	1	1	1	3-22280-3	SPRING, COMPRESSION	12
	-	1	1	1	1	1	1	356885-4	STOP, SHEAR	11
1	-	-	1	1	-	1	1	1320921-1	SHEAR HOLDER, FRONT, CUT	10
1	-	1	1	1	1	1	1	462006-1	FLOATING SHEAR, FRONT	9
1	1	2	2	2	1	1	1	1633127-5	ANVIL, COMBINATION .042	8
	-	-	-	-	-	-	-	-	-	7
	-	-	-	-	-	-	-	-	-	6
	-	1	1	1	1	1	1	2-455889-0	DEPRESSOR, SHEAR	5
	-	1	1	1	1	1	1	2-238011-0	BLOCK, CRIMPER SPACER	4
1	1	2	2	2	1	1	1	5-456135-7	CRIMPER, INSULATION O PREMIUM	3
	-	1	1	1	1	1	1	455888-3	SPACER, CRIMPER	2
1	1	2	2	2	1	1	1	1-456401-7	CRIMPER, WIRE PREMIUM	1
	-77	-76	-72	-71	-6	-2	-1	PART NO	DESCRIPTION	ITEM NO

* WARNING
ON INSTALLATION, SET WIRE DISC TO LARGEST WIRE SIZE SETTING. USE OF SETTINGS BELOW MIN. REQUIRED CRIMP HEIGHT SETTING WILL CAUSE DAMAGE TO CRIMP TOOLING.

VIEW B ROTATED 180°

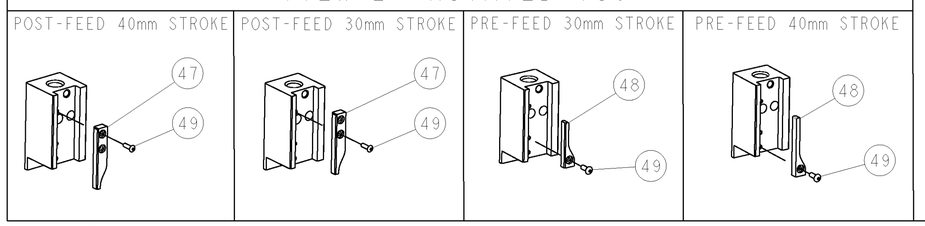

	-	-	-	-	-	-	-	-	84
	-	-	-	-	-	-	-	-	83
	-	1	1	1	1	1	1	1-455888-0	SPACER, CRIMPER	82
	-	-	-	-	-	-	-	-	-	81
	-	-	-	-	-	-	-	-	-	80
	-	-	-	-	-	-	-	-	-	79
	-	-	-	-	-	-	-	-	-	78
	-	-	-	-	-	-	-	-	-	77
	-	-	-	-	-	-	-	-	-	76
	-	-	-	-	-	-	-	-	-	75
	-	-	-	-	-	-	-	-	-	74
	-77	-76	-72	-71	-6	-2	-1	PART NO	DESCRIPTION	ITEM NO

THIS DRAWING IS CONTROLLED DOCUMENT FOR TYCO ELECTRONICS CORPORATION. IT IS SUBJECT TO CHANGE WITHOUT NOTICE. CUSTOMER ORGANIZATION SHOULD BE CONTACTED FOR THE LATEST REVISION.

DIMENSIONS: mm [IN]

TOLERANCES UNLESS OTHERWISE SPECIFIED:
0 PLC ±-
1 PLC ±-
2 PLC ±-
3 PLC ±-
4 PLC ±-
ANGLES ±-

MATERIAL - -
FINISH - -

DWN L LOFTHOUSE 09AUG06
CHK -
APVD M CLIFFORD 09AUG06
PRODUCT SPEC -
APPLICATION SPEC See Table
WEIGHT -

tyco Electronics
Tyco Electronics
Harrisburg, PA 17105-3608

NAME FINE ADJUST SIDE FEED HDI APPLICATOR -

SIZE A1 | CAGE CODE 00779 | DRAWING NO C-1528700 | RESTRICTED TO -

CUSTOMER DRAWING | SCALE 3:5 | SHEET 1 OF 1 | REV A

AMP 4805 REV 31MAR2000

Pro/ENGINEER DRAWING